SIRIUS 2.0

S2D620CB

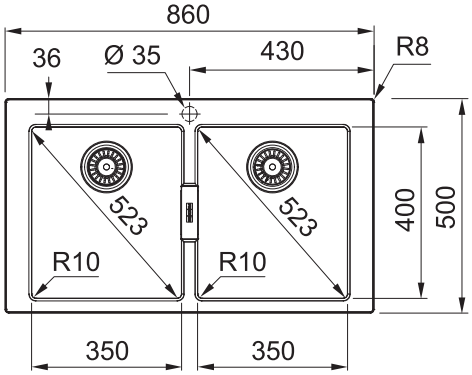

PRODUCT INFORMATION

Installation	Topmount/Undermount
Dimensions	860 x 500mm
Cabinet Base	800mm
Bowl Size	350 x 400 x 200mm / 28L (x2)
Bowl Radius	10mm
Cut-Out Size	844 x 484mm
Waste Outlet	Semi Integrated Waste
Overflow	Yes
Tap Holes	Yes (cut out 35mm)
Fast Fix Clips	Yes
Colour	Carbon Black
Warranty	10 Years

Installation clips not available

NOTE: Cut-out dimensions are a guide only, please use the actual sink as your template.

ACCESSORIES

Included Accessory
Available Accessory

DT651
Extension Drainer

RM44
Rollamat

DB448
Drainer Basket

FEATURES & BENEFITS

Food Preparation Centre

Tectonite

BARE SINK OPTION AND SOME SINK & TAP PACKAGES DO NOT INCLUDE ACCESSORIES.
PLEASE CHAT TO YOUR SALES CONSULTANT FOR FURTHER INFORMATION.

LAST UPDATED: 22 SEPTEMBER 2021

FRANKE