SIRIUS 2.0

S2D621CB

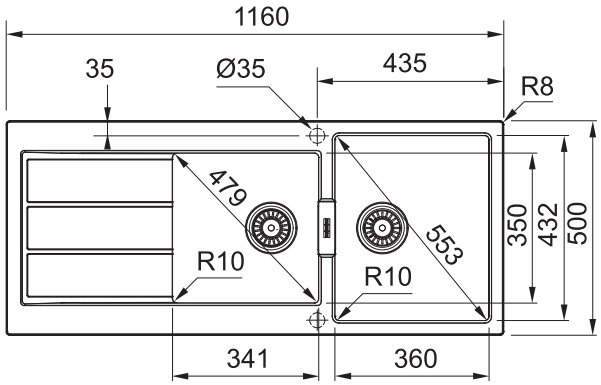

PRODUCT INFORMATION

Installation	Topmount
Dimensions	1160 x 500mm
Cabinet Base	800mm
Bowl Size	360 x 432 x 200mm / 31L 341 x 350 x 150mm / 18L
Bowl Radius	10mm
Cut-Out Size	1144 x 484mm
Waste Outlet	Semi Integrated Waste
Overflow	Yes
Tap Holes	No
Fast Fix Clips	Yes
Colour	Carbon Black
Warranty	10 Years

NOTE: Cut-out dimensions are a guide only, please use the actual sink as your template.

ACCESSORIES

Included Accessory
Available Accessory

RM44
Rollamat

DB448
Drainer Basket

FEATURES & BENEFITS

Food Preparation Centre

Tectonite

BARE SINK OPTION AND SOME SINK & TAP PACKAGES DO NOT INCLUDE ACCESSORIES.
PLEASE CHAT TO YOUR SALES CONSULTANT FOR FURTHER INFORMATION.

LAST UPDATED: 22 SEPTEMBER 2021