FCE90M10B
90CM MULTIFUNCTION OVEN

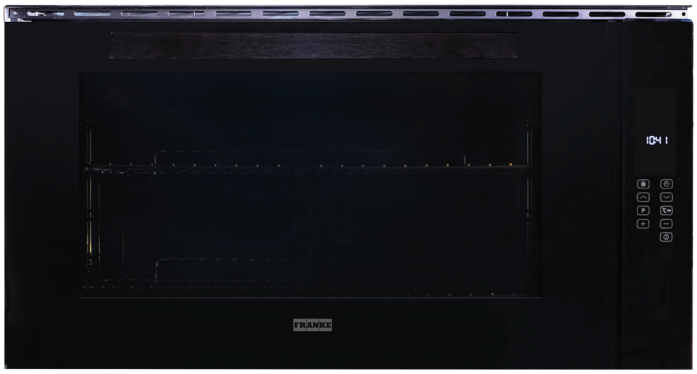

PRODUCT INFORMATION

Overall Dimensions (mm)	894(W) x 482(H) x 545(D)
Capacity	105L Net
Oven Functions	10
Pyrolytic Function	No
Power	220-240V 50/60Hz, 3660W Max
Display	White LCD Display
Control Interface	Touch Control
Oven Door	Triple Glaze
Lighting	Twin
Child Lock	Yes
Soft Close	No
Finish	Black Glass
Accessories	Telescopic Runner Set x 1 Wire Racks x 2 Baking Tray with Wire Rack x 1 Catalytic Liners (sides & rear)
Warranty	2 Years

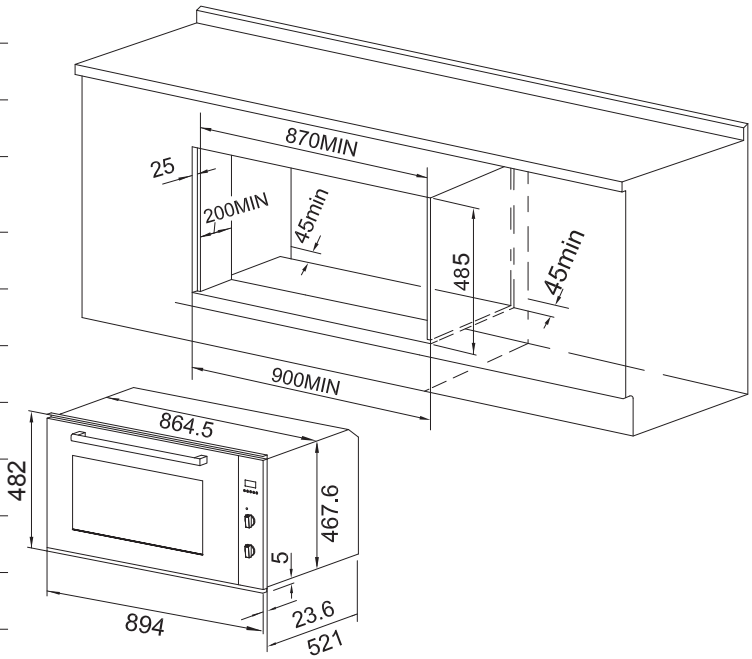

PLEASE NOTE: Technical and product specifications may change; therefore, cut-outs for appliances should only be by physical product measurements. The above information is indicative only.

LAST UPDATED: 7 NOV 2020