TECHNICAL DATASHEET

SNOW TA 7400

Product Category	Taps
Finish	Chrome
Range	SNOW
Model	TA 7400
Warranty	15 Years

PRODUCT INFORMATION

Article Number	115.0522.023
Style	Swivel
Cut-Out Size	ø 35mm
WELS	4 star / 7.5 Lpm
Min. (PSI)	7.25
Max. (PSI)	72.5
Min. (kPa)	50kPa
Max. (kPa)	500kPa

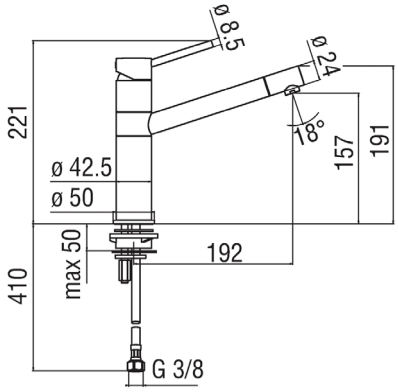

PLEASE NOTE

Large and heavy taps should ideally be mounted directly through the solid benchtop or fully supported from underneath. For all other swivel taps, we recommend the use of the Franke Tap Support Arm to provide additional support. Please ensure all Franke tapware is installed at a pressure of no greater than 500 kPa in accordance with AS/NZS3500 and insist that your plumber flushes all of the water supply lines before installing tapware.
Failure to do so may void warranty.

LAST UPDATED: 12 SEPTEMBER 2017

Make it wonderful

FRANKE